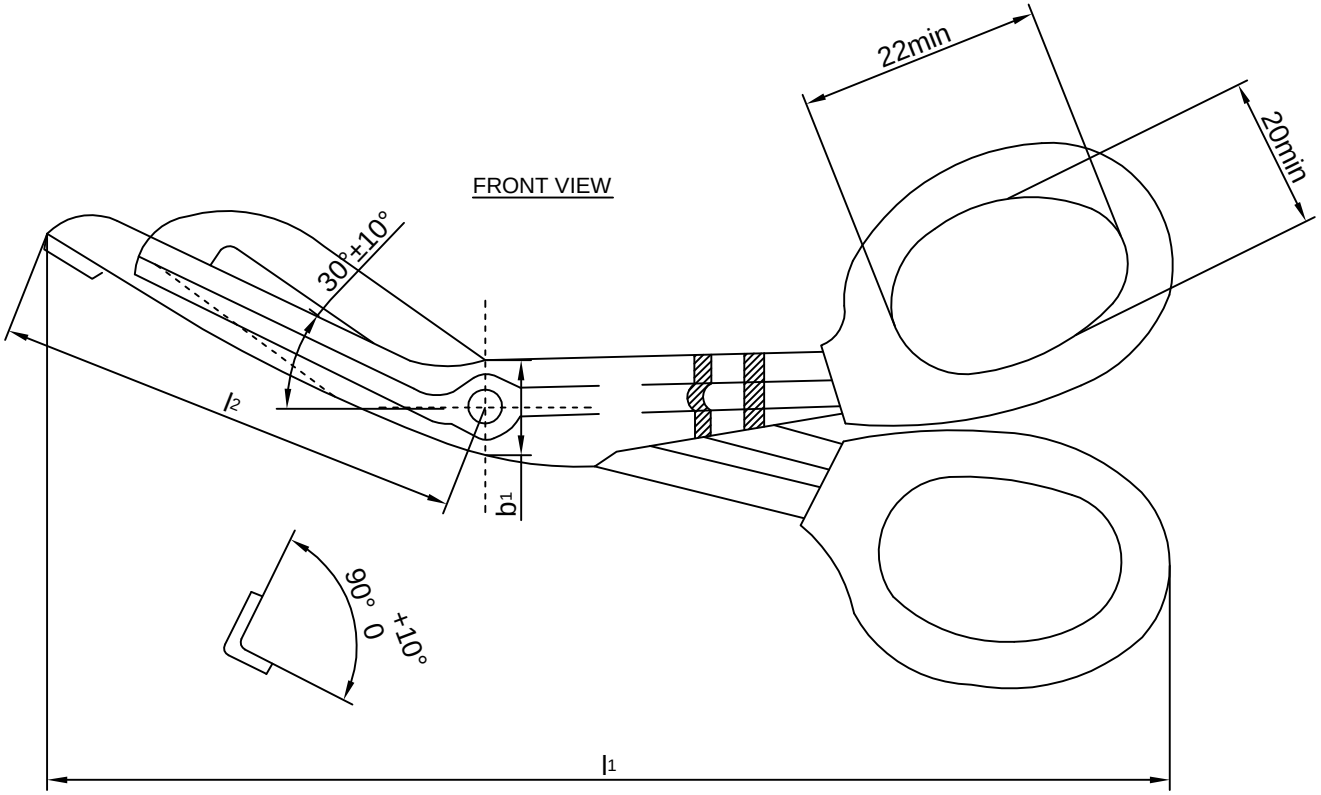

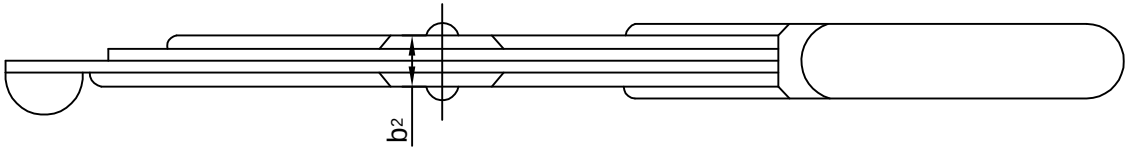

Y.B.SURGICO

Manufactures & Exporters

Ghulshan Street Muradia Road Modle Town
Sialkot. PAKISTAN

Tel: +92 52 3551358 , 3557709
Fax: 92 52 3557705
www.ybsurgico.com.pk

DEVICE	Universal Scissor Black		
REF.NO.	SIV-173-19		
Material	Stainless Steel 420		
Size	18.0cm		
Charge		Page	1
Date	17-03-2017	Approved by	Director QC

Ref	l_1 ±5.00	b_1 ±2.0	b_2 ±1.00	l_2 ±5.00
SIV-173-19	180.00	14.00	5.00	66.00